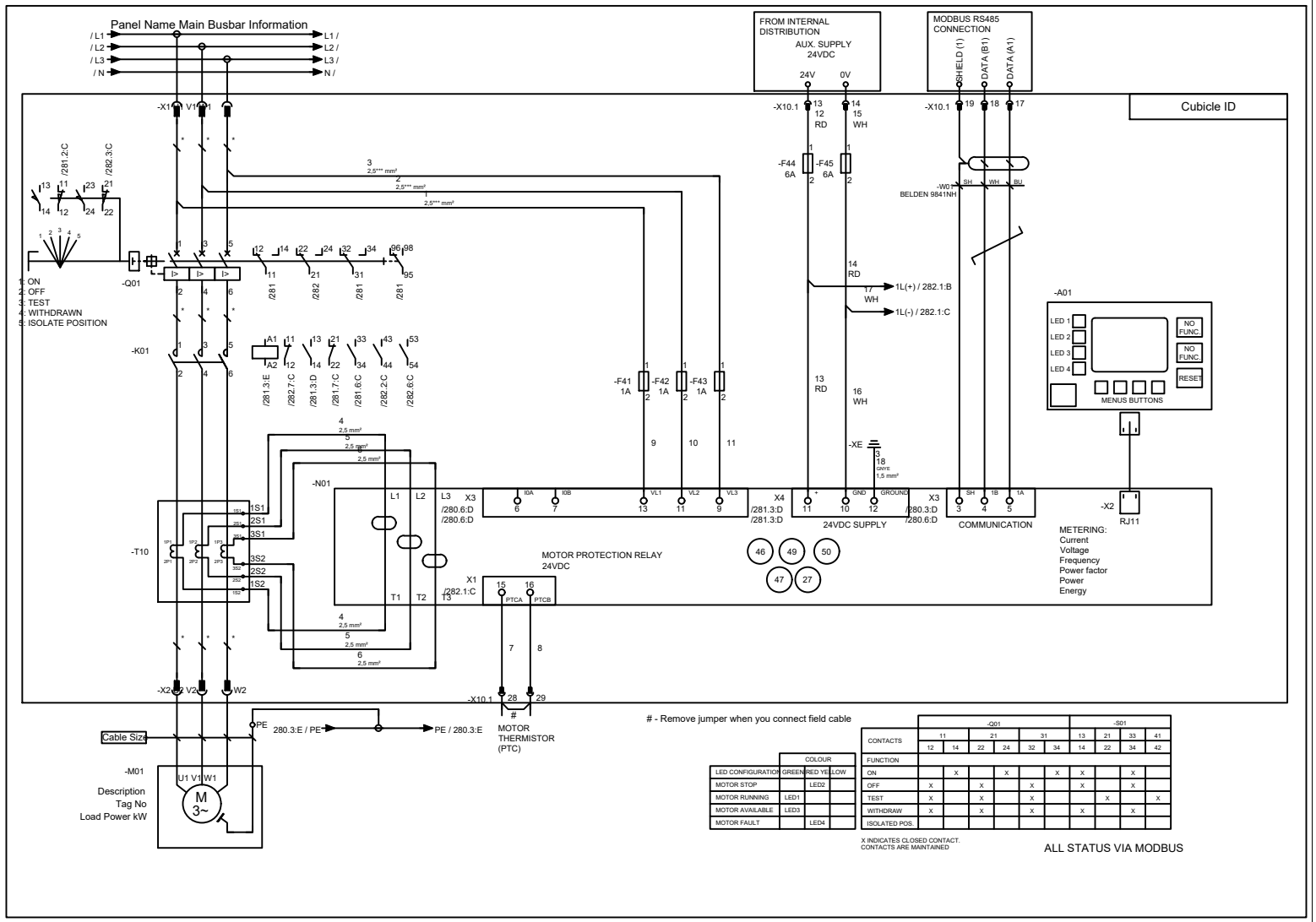

- Remove jumper when you connect field cable

	COLOUR		
LED CONFIGURATION	GREEN	RED	YELLOW
MOTOR STOP		LED2	
MOTOR RUNNING	LED1		
MOTOR AVAILABLE	LED3		
MOTOR FAULT		LED4	

	-Q01						-S01			
CONTACTS	11		21		31		13	21	33	41
	12	14	22	24	32	34	14	22	34	42
FUNCTION										
ON		X		X		X	X		X	
OFF	X		X		X		X		X	
TEST	X		X		X			X		X
WITHDRAW	X		X		X		X		X	
ISOLATED POS.										

X INDICATES CLOSED CONTACT.
CONTACTS ARE MAINTAINED

ALL STATUS VIA MODBUS

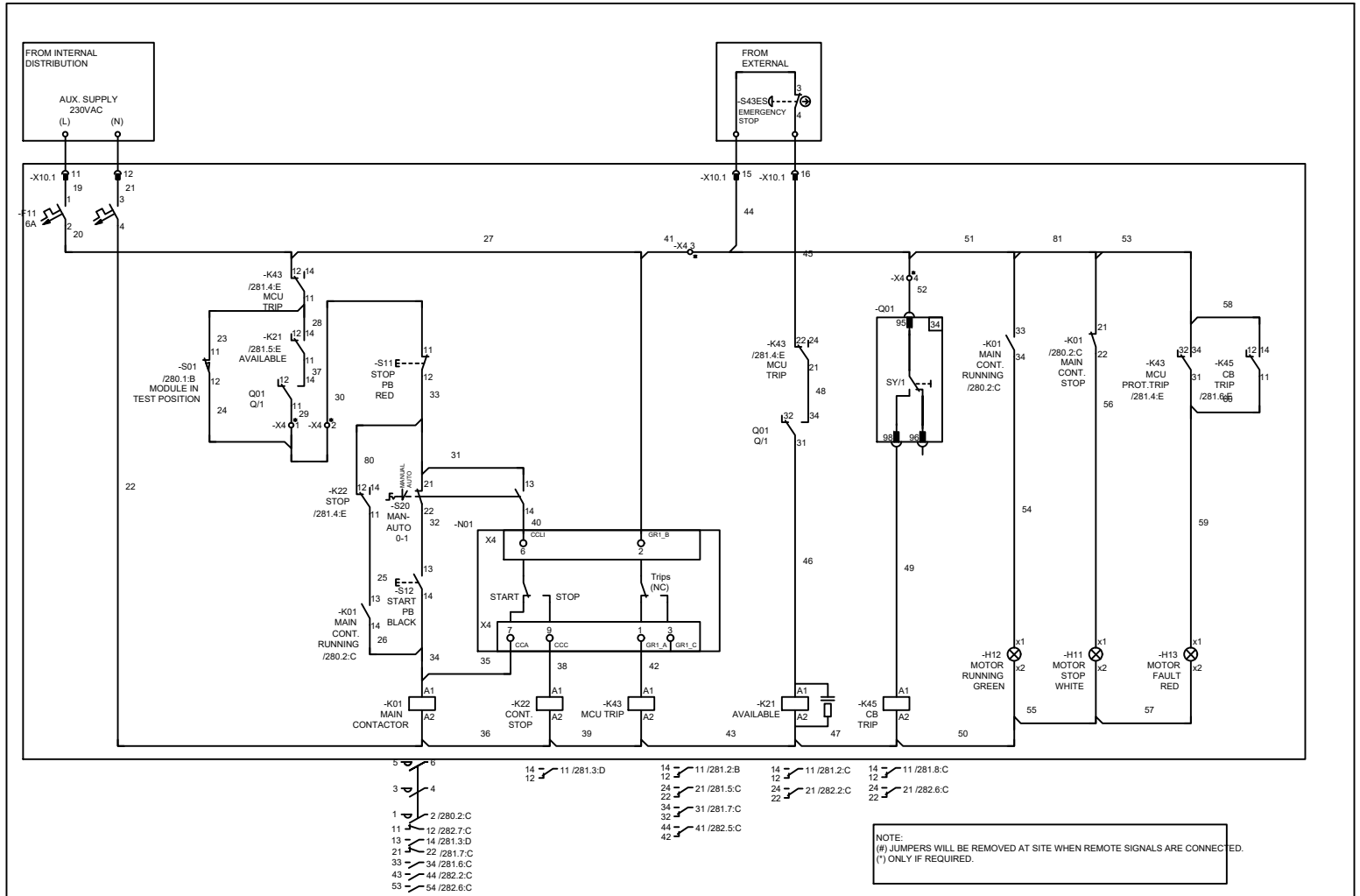

NOTE:
(#) JUMPERS WILL BE REMOVED AT SITE WHEN REMOTE SIGNALS ARE CONNECTED.
(*) ONLY IF REQUIRED.

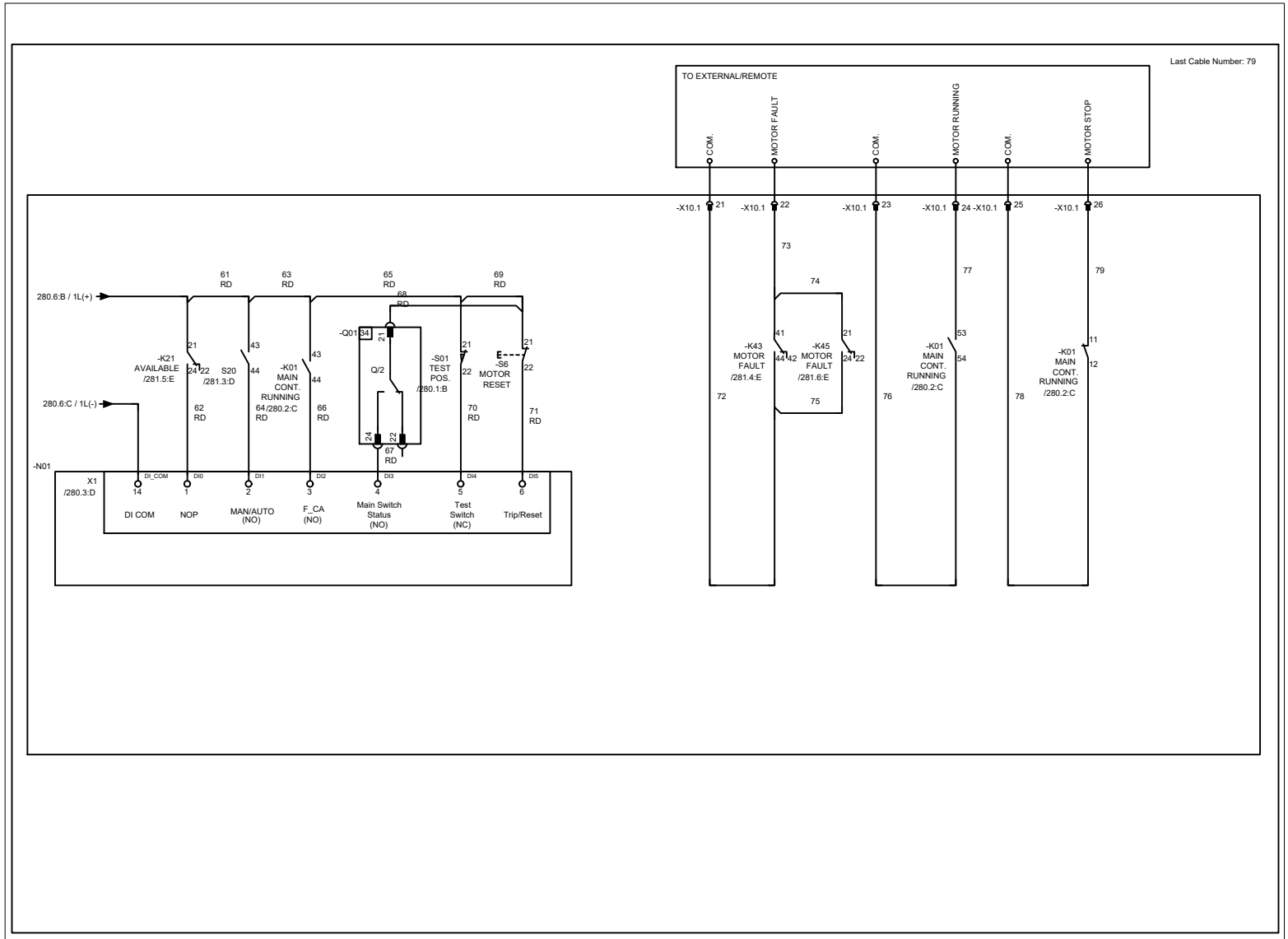
Last Cable Number: 79
TO EXTERNAL/REMOTE
COM.
MOTOR FAULT
COM.
MOTOR RUNNING
COM.
MOTOR STOP
-X10.1 21
-X10.1 22
-X10.1 23
-X10.1 24
-X10.1 25
-X10.1 26
73
74
77
79
280.6:B / 1L(+)
61 RD
63 RD
65 RD
68 RD
69 RD
-Q01
34
21
-K21
AVAILABLE
/281.5:E
24
22
S20
/281.3:D
43
44
-K01
MAIN
CONT.
RUNNING
/280.2:C
Q/2
-S01
TEST
POS.
/280.1:B
E
-S6
MOTOR
RESET
280.6:C / 1L(-)
62 RD
64 RD
66 RD
70 RD
71 RD
67 RD
-N01
X1
/280.3:D
DI_COM
DI0
DI1
DI2
DI3
DI4
DI5
14
1
2
3
4
5
6
DI COM
NOP
MAN/AUTO
(NO)
F_CA
(NO)
Main Switch
Status
(NO)
Test
Switch
(NC)
Trip/Reset
-K43
MOTOR
FAULT
/281.4:E
41
42
-K45
MOTOR
FAULT
/281.6:E
72
75
76
53
54
11
12
78
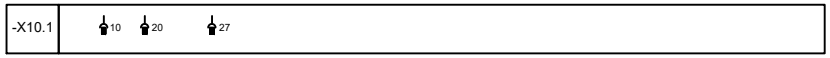
SPARE TEMINAL